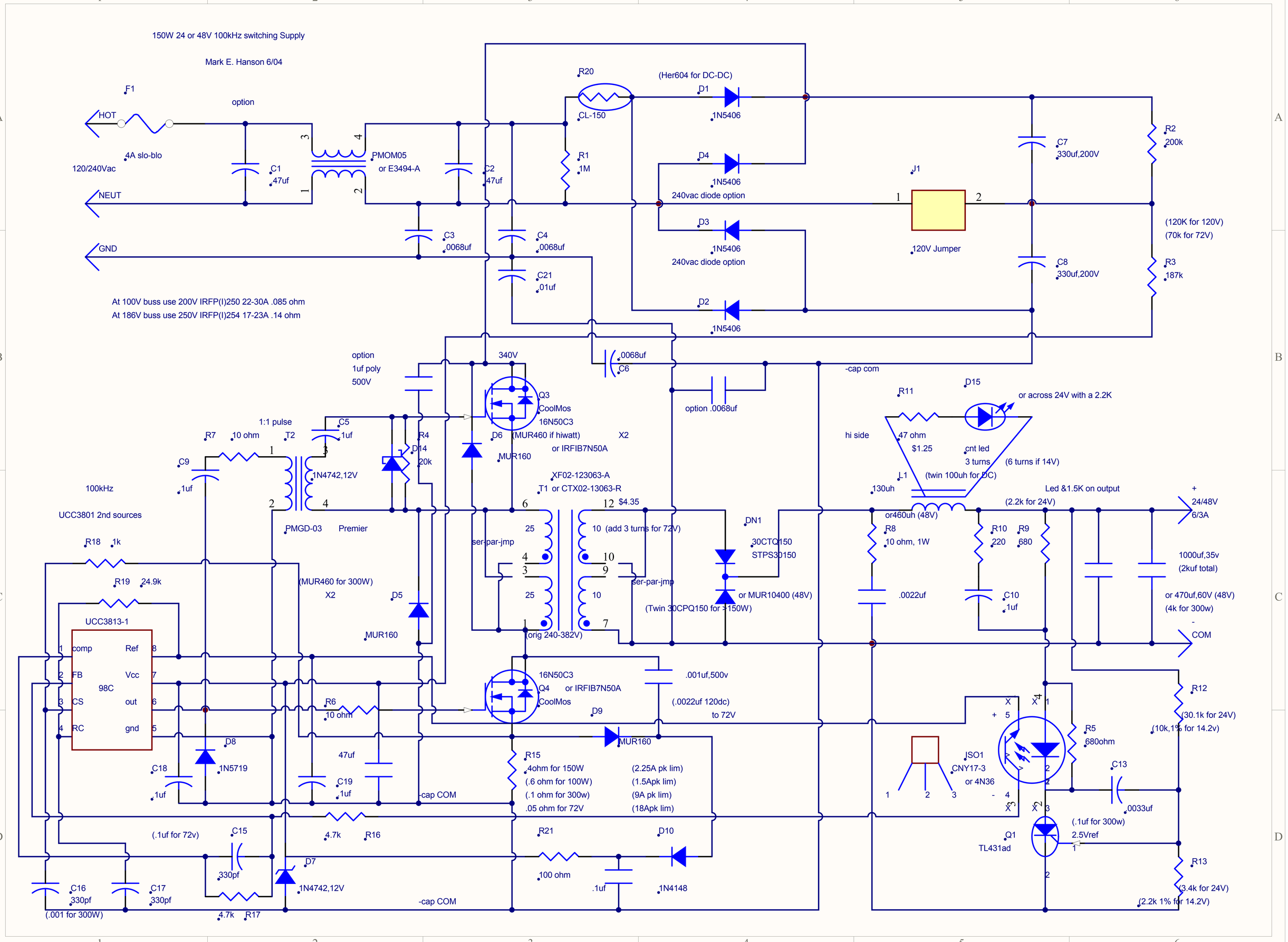
150W 24 or 48V 100kHz switching Supply
Mark E. Hanson 6/04
F1
HOT
option
4A slo-blo
120/240Vac
NEUT
GND
C1
.47uf
PMOM05
or E3494-A
C2
.47uf
C3
.0068uf
C4
.0068uf
C21
.01uf
R20
CL-150
R1
1M
(Her604 for DC-DC)
D1
1N5406
D4
1N5406
240vac diode option
D3
1N5406
240vac diode option
D2
1N5406
J1
120V Jumper
C7
330uf,200V
C8
330uf,200V
R2
200k
R3
187k
(120K for 120V)
(70k for 72V)
At 100V buss use 200V IRFP(I)250 22-30A .085 ohm
At 186V buss use 250V IRFP(I)254 17-23A .14 ohm
option
1uf poly
500V
340V
.0068uf
C6
Q3
CoolMos
16N50C3
D6 (MUR460 if hiwatt)
or IRFIB7N50A
MUR160
X2
option .0068uf
-cap com
R11
D15
or across 24V with a 2.2K
hi side
47 ohm
$1.25
cnt led
3 turns
(6 turns if 14V)
L1
(twin 100uh for DC)
130uh
or460uh (48V)
1:1 pulse
R7
10 ohm
T2
C5
1uf
R4
D14
20k
C9
1uf
1N4742,12V
100kHz
UCC3801 2nd sources
PMGD-03
Premier
XF02-123063-A
T1 or CTX02-13063-R
$4.35
ser-par-jmp
10 (add 3 turns for 72V)
DN1
30CTQ150
STPS30150
or MUR10400 (48V)
(Twin 30CPQ150 for >150W)
R8
10 ohm, 1W
R10
220
R9
680
Led &1.5K on output
(2.2k for 24V)
+
24/48V
6/3A
1000uf,35v
(2kuf total)
or 470uf,60V (48V)
(4k for 300w)
-
COM
R18
1k
R19
24.9k
(MUR460 for 300W)
X2
D5
MUR160
UCC3813-1
comp
FB
CS
RC
Ref
Vcc
out
gnd
98C
(orig 240-382V)
.0022uf
C10
.1uf
16N50C3
Q4
or IRFIB7N50A
CoolMos
D9
.001uf,500v
(.0022uf 120dc)
to 72V
R6
10 ohm
MUR160
R12
(30.1k for 24V)
(10k,1% for 14.2v)
R5
680ohm
ISO1
CNY17-3
or 4N36
C13
.0033uf
D8
1N5719
C18
.1uf
47uf
C19
.1uf
-cap COM
R15
4ohm for 150W
(.6 ohm for 100W)
(.1 ohm for 300w)
.05 ohm for 72V
(2.25A pk lim)
(1.5Apk lim)
(9A pk lim)
(18Apk lim)
(.1uf for 72v)
C15
330pf
4.7k
R16
R21
D10
100 ohm
.1uf
1N4148
(.1uf for 300w)
2.5Vref
Q1
TL431ad
R13
(3.4k for 24V)
(2.2k 1% for 14.2V)
D7
1N4742,12V
C16
330pf
C17
330pf
(.001 for 300W)
4.7k
R17
-cap COM